# PDDEG-S

Ethernet Gateway - Supervisor

## Specification Sheet

Gateways > Network Gateways

### Secure remote connection to the Dynalite System

The Dynalite PDDEG-S provides gateway services between Ethernet and DyNet devices, enabling secure online access to the Dynalite lighting control system.

The gateway enables lighting control via a dedicated Dynalite app, and access to the timeclock, schedule editor, and diagnostic functions via an inbuilt webserver.

## Key Features

- **System supervisory functions** - Includes online/offline status reporting for connected devices, network traffic logging, secure remote firmware update, and lighting control metrics. Inbuilt timeclock and schedule manager support automated operations and task scheduling.
- **Multiple integration options** - Supports TCP/UDP, IPv4/IPv6, unicast/multicast/broadcast, DyNet1, DyNet2, Fidelio, BACnet (see Ordering Codes for license options), and 'Text and Binary Integration' protocols. Capable of supporting hundreds of concurrent socket connections.
- **Flexible connectivity** - Provides secure cloud connectivity to the building with user-configurable routing and a range of RS-485 and Ethernet bridging functions.
- **Powerful custom task engine** - Allows users or third-party systems to run macros such as 'After Hours', 'Shut Down', 'Welcome', and more.
- **Web server and app access** - Enables remote access to lighting control, schedule editing, and device configuration.
- **Secure connection to Dynalite controllers** - Each PDDEG-S supports encrypted communication with up to 25 Ethernet-equipped controllers, including the DDBC320-DALI and DDRC-GRMS-E.
- **Flexible mounting** - DIN rail mounting clips designed for installation into a distribution board or electrical enclosure.

## Dimensions

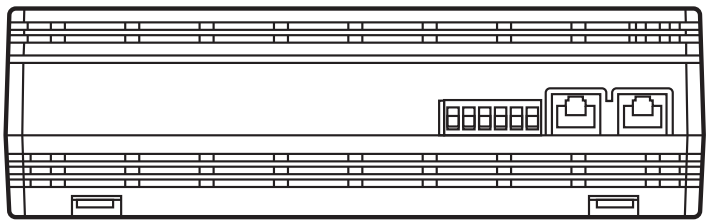

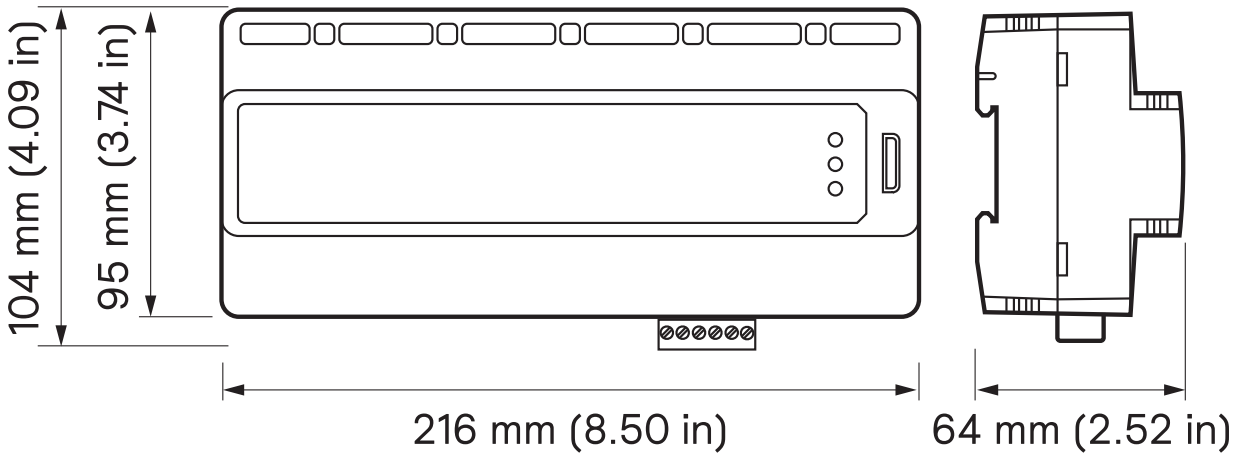

## Specifications

| Electrical | |
|---|---|
| Supply Type | Single-Phase |
| Supply Voltage | 100-277 VAC |
| Supply Current | 250 mA |
| DyNet DC Output Voltage | 12 VDC |
| DyNet DC Output Current | 300 mA |
| IEC Overvoltage Category | III |

| Control | |
|---|---|
| Communication Ports | 1 x RS-485<br>2 x Ethernet (10/100 baseT) |
| Supported Protocols | DyNet (Port 1 only)<br>TCP/IP (IPv4, IPv6)<br>BACnet (requires license) |
| Dry Contact Inputs | 1 (AUX) |
| User Controls | 1 x service switch |
| Indicators | 1 x Service LED<br>2 x Ethernet LED<br>1 x Cloud LED |

| Physical | |
|---|---|
| Dimensions | 95 x 216 x 64 mm<br>(3.74 x 8.50 x 2.52 in) |
| Packed Weight | 0.45 kg (0.99 lb) |
| Construction | Polycarbonate DIN rail case (12 unit) |
| Communication Ports | 2 x RJ45<br>1 x 6-way pluggable screw terminal |
| Communication Terminal Conductor Size | 0.3-2.5 mm² (#22-12 AWG) |
| Supply Terminals | 3 x screw terminal |
| Supply Terminal Conductor Size | 0.2-5 mm² (#24-10 AWG) |

| Environment | |
|---|---|
| Operating Temperature | 0° to 50°C ambient<br>(32° to 122°F) |
| Storage/Transport Temperature | -25° to 70°C ambient<br>(-13° to 158°F) |
| Relative Humidity | ≤90% non-condensing |
| IEC Pollution Degree | II |
| Installation Note | For indoor installation only |

| Compliance | |
|---|---|
| Certifications | CE, RCM, UL/cUL, FCC, UKCA, RoHS, ISED, BACnet<br>ISO 16484-6 |

## Electrical Drawing

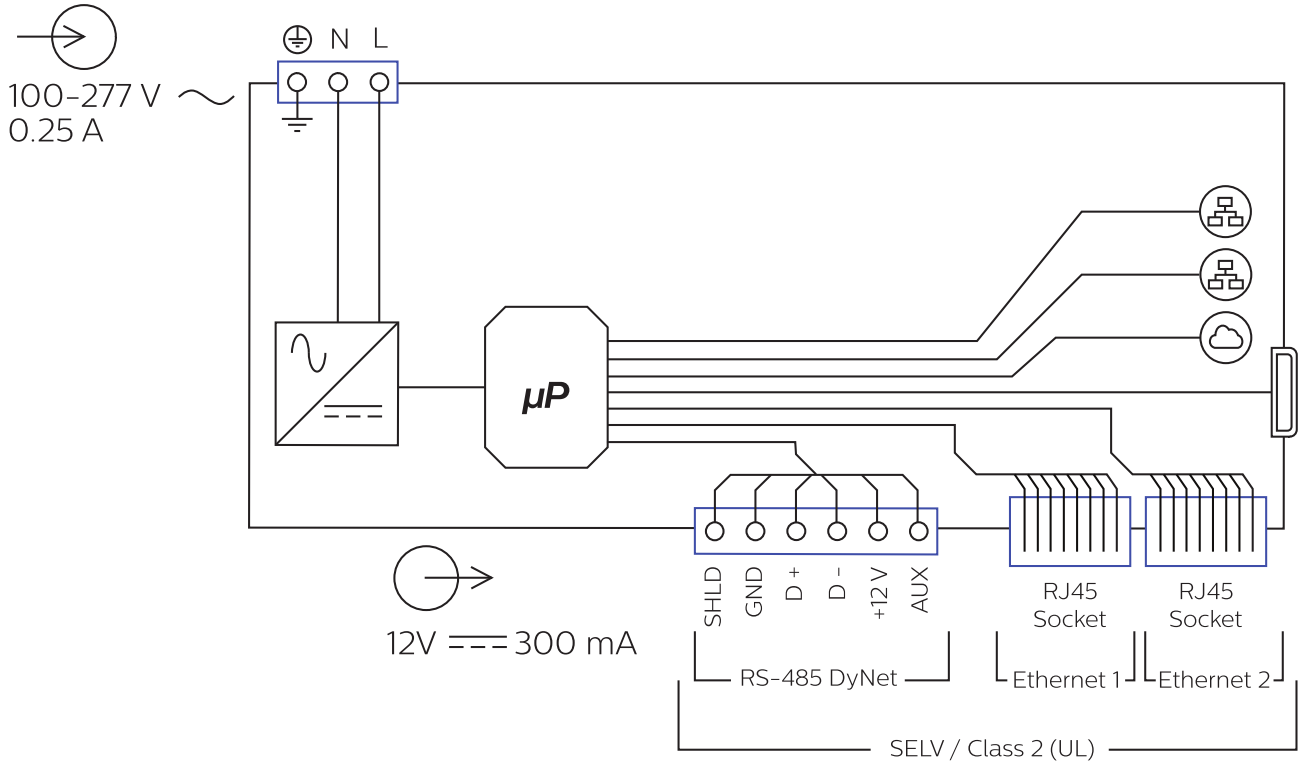


## Ordering Codes

| Product | 12NC |
|---|---|
| PDDEG-S | 913703371509 |

| BACnet License | 12NC |
|---|---|
| PDDEG-S BACnet 500 point license | SW913703370509 |
| PDDEG-S BACnet 1k point license | SW913703370609 |
| PDDEG-S BACnet 5k Point license | SW913703370709 |
| PDDEG-S BACnet 10k Point license | SW913703370809 |

© 2026 Signify Holding. All rights reserved. Specifications are subject to change without notice. No representation or warranty as to the accuracy or completeness of the information included herein is given and any liability for any action in reliance thereon is disclaimed. All trademarks are owned by Signify Holding or their respective owners.