DADPE

Antumbra Display EU

signify Dynalite

Specification Sheet

User Interfaces > Antumbra

Contemporary button panel with colour LCD

The Antumbra Display user interface provides a central display to present multiple pages of functions and system information. It incorporates the latest in field effect technology.

The contemporary design features a number of button configurations, with each button capable of local or site-wide control functions. The DADPE range is suitable for, but not limited to, European, Middle Eastern, African, and Asian markets.

Key Features

- **Field effect proximity detection** – The user interface detects an approaching user and 'wakes up', initiating a wall-wash lighting effect to encourage interaction (mounting plate must be grounded to avoid false triggering from nearby ungrounded metal objects).
- **Supplied as two components** – The Application Module contains buttons, rim, base, and mounting plate, which can be mixed and matched to suit décor. The Communication Module contains all of the logical and network functions and is pre-programmed off-site, allowing commissioning to commence prior to finish options being finalised.
- **Hidden sensory inputs** – Built-in temperature and humidity sensors automatically adjust air conditioning when integrated into the system.
- **Colour LCD** – Navigate up to 16 pages of button functions and system information such as temperature, time, channel level, and current scene.
- **Multiple language and icon labelling** – Button labelling language choices include English, Chinese, and Arabic. A library of common icons transcends language barriers, which is particularly useful in hospitality applications.
- **Décor-matching options** – Buttons and rims are available in a range of attractive polycarbonate and metallic finishes.

Dimensions

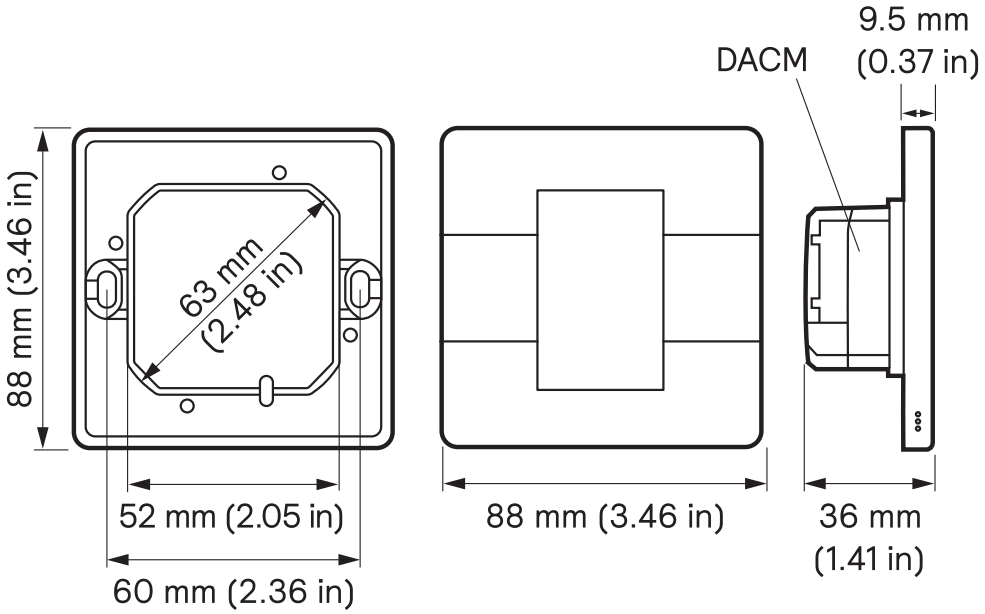

Specifications

Electrical

Supply Type	DyNet
Supply Voltage	12–24 VDC (SELV/Class 2)
Supply Current	90 mA @ 12 VDC 50 mA @ 24 VDC
IEC Overvoltage Category	II

Display

Display Type	TFT-LCD
Display Resolution	480 x 272 px
Viewable Area	53.3 x 30.2 mm (2.1 x 1.19 in)
Viewing Angle	80°

Application Module

User Controls	6 x software-configurable buttons
Indicators	White indicator LED on each button White wall-wash backlight
Temperature Sensor Range	5° to 40°C (41° to 104°F)
Temperature Sensor Accuracy	± 1°C (± 1.8°F)
Humidity Sensor Accuracy	± 5%

Communication Module

Serial Ports	1 x RS-485
Supported Protocols	DyNet
User Controls	1 x service switch
Indicators	1 x service LED

Physical

Dimensions	88 x 88 x 36 mm (3.46 x 3.46 x 1.42 in) (Fully assembled)
Packed Weight	**Application module:** 0.2 kg (0.44 lb) **Communication module:** 0.12 kg (0.25 lb)
Serial Ports	1 x 5-way pluggable screw terminal
Serial Port Conductor Size	0.3–2.5 mm² (#22–12 AWG)

Environment

Operating Temperature	-5° to 50°C ambient (23° to 122°F)
Storage/Transport Temperature	-25° to 60°C ambient (-13° to 140°F)
Relative Humidity	≤90% non-condensing
IEC Pollution Degree	II
Installation Note	Indoor installation only

Compliance

Certifications	CE, RCM, FCC, ISED, UKCA
Sustainability	RoHS
IP Rating	IP22

Available Finishes

Antumbra Display EU Assembly

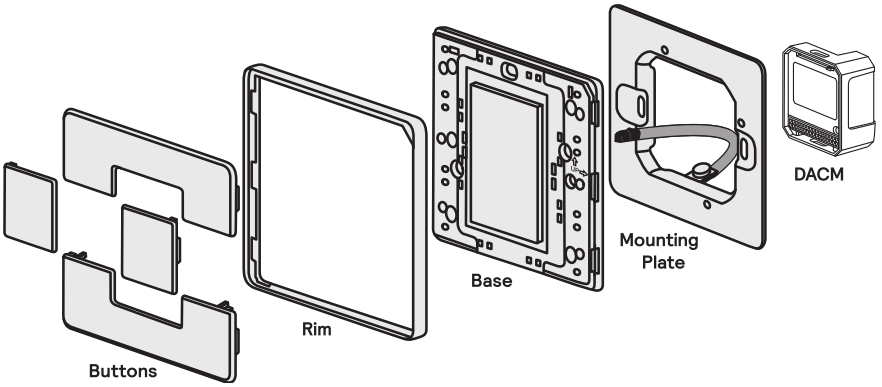

Ordering Codes

Application Module Ordering Codes

The Application Module contains the buttons, rim, base and mounting plate. The buttons and rim are available in the range of finishes shown below. The base contains all the sensors and LED indicators. Sensitive components are enclosed by a rubber envelope to give an IP22 rating, allowing installation in high-condensation environments such as bathrooms.
A metal mounting plate attaches the Antumbra panel securely to the wall, ensuring stable, reliable operation.

DADPE-SM-X

Button Finish		Rim Finish	Button Labelling
Lacquer (Polycarbonate)	**Luxe** (Metallic)	A = Aluminium	X = Not Available
M = Magnesium	A = Aluminium	C = Chrome	
S = Silver	G = Gold	M = Magnesium	
W = White	J = Jet	W = White	
	N = Noir		
	P = Prestige		
	V = Vintage		

Communication Module

The Communication Module is compatible with all interfaces across the Antumbra series, and can be ordered, programmed, installed, wired, and tested without the Application Module attached.

This allows the commissioning process to begin before the final finish options have been chosen, or during construction, and protects the Application Module from damage until the site is ready for occupancy.

Product		12NC
DACM (DyNet)	DyNet communication module	913703072809

Accessory		12NC
D-DACM-DINGUS-RJ12-QTY10	Dual RJ12 connector with earth wire - pack of 10	913703255209
D-DACM-DINGUS-RJ45-QTY10	Dual RJ45 connector with earth wire - pack of 10	913703254809

Policies and Notices

Specific Data Notice

This Specific Data Notice applies to the User Interfaces as specified in this product specification sheet (the **"User Interface"**) that is part of or works with a Professional System offered by Signify for use in the European Union and supplements and/or corrects the Generic Data Notice For Professional Systems and Services that can be found at https://www.signify.com/global/resources/policies-announcements (the **"Generic Data Notice"**) by providing additional and/or more specific details specific to this User Interface.

Terms starting with a capital in this Specific Data Notice will have the meaning as attributed thereto in the Generic Data Notice, unless explicitly defined otherwise in this document.

When used in a Signify professional lighting system in combination with a Dynalite Gateway with either the Dynalite Switch App, Dynalite System Builder, Dynalite System Manager, or Dynalite Cloud, the User Interface can generate the Data as specified below (The type and volume and format of the Data that is generated depends on the product and/or software configuration and subscription to the relevant software service):

- Operational Data: Lighting control commands based on events configured in this product via the RS-485 DyNet network.
- Sensor Data: Temperature and Humidity reporting via the RS-485 DyNet network

The Data generated in this combination is communicated via the network to the gateway and is stored on the gateway. If configured to do so, the gateway can forward the Data to Dynalite Cloud or to Dynalite System Manager. For applicable retention period and means of access to Data that is Readily Available Data, please refer to the Dynalite Cloud software specification sheet. Data cannot be accessed directly from the User Interface (In typical use, once the connected product has been commissioned, data generated on the device is not directly accessible). Data can be accessed from the Gateway using Dynalite System Builder or directly from any of the APIs of the Gateway. The Gateway will persist the Data for 28 days on a rolling basis.

This Specific Data Notice may be changed by Signify from time to time. The current version of this notice will apply and can be obtained at request via the point of contact as indicated in paragraph 7 of the Generic Data Notice.

© 2026 Signify Holding. All rights reserved. Specifications are subject to change without notice. No representation or warranty as to the accuracy or completeness of the information included herein is given and any liability for any action in reliance thereon is disclaimed. All trademarks are owned by Signify Holding or their respective owners.